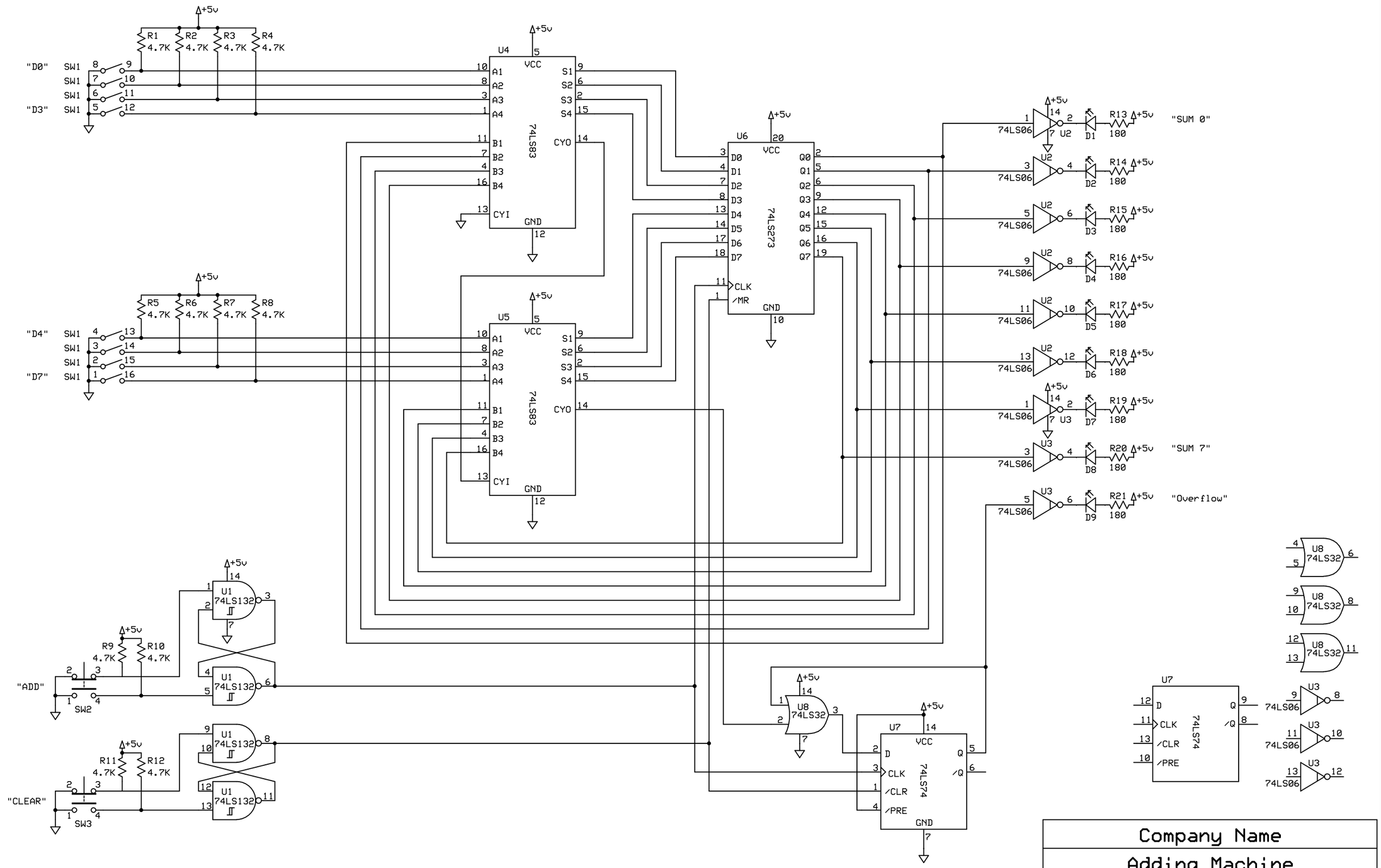

Company Name		
Adding Machine		
Designer's name	Rev 1.0 11/23/2010	Page # or name